TOMAR ELECTRONICS INC.

INSTRUCTION SHEET
JMMK MAGNETIC MOUNTING KIT
ON MINI HELIOBE LIGHT BARS ONLY

INSTALLER SAFETY MESSAGE

The safe installation of the Tomar 930 MINI HELIOBE Light Bar is your first priority. All instructions listed here should be followed and common sense applied to each Light Bar installation to insure safety. Tomar field service should be called if you have any question.
Some important precautions and instructions:

- Installers should have a good understanding of automotive electrical and mechanical systems. The quality of the installation work should equal or surpass OEM standards.

- Protect the vehicle components when drilling into the sheet metal. Metal chips and sharp edges must not be left on the vehicle. Check to see that the drill bit will not damage surrounding components when it penetrates the sheet metal.

- Review all instruction sheets packed with other components of the 930 MINI HELIOBE Light Bar and make sure you thoroughly understand each step of the installation before you start.

- Because vehicle roof construction and driving conditions vary, Tomar does not recommend driving a vehicle with a magnetically mounted light bar installed. The light bar could fly off the roof of the vehicle causing injury or damage. Liability for the use of the JMMK Magnetic Mounting Kit shall be the sole responsibility of the user.

- File these instructions in a safe place for future reference.

Perform a final inspection of the installation to insure that the 930 MINI HELIOBE Light Bar is operating properly. Failure to follow all safety procedures and instructions may result in serious injury, property damage or death to you or others.

I. GENERAL INFORMATION

This instruction sheet provides procedures to install the JMMK Magnetic Mounting Kit to the Tomar 930 MINI HELIOBE Light Bar and mount the assembly to the vehicle. In order to complete the installation, you must have purchased the 930 Mini HELIOBE Light Bar and a JMMK Magnetic Mounting Kit. Your 930 Mini Light Bar should also have the correct lamp configuration you have ordered.

II. UNPACKING

Check to see that all components shown in Figures 1 and 2 are included. Check your packing lists carefully.

III. ASSEMBLY

A. Turn the light bar assembly upside down while protecting the top surface from scratches.

B. Slide 2 of the carriage bolts to each end of the slot in the bottom of the light bar, approx. 4 inches from the end of the aluminum extrusion.

C. Insert a rubber grommet into the center hole of each magnet. Insert a 3/8” spacer into the center hole of each grommet.

D. Install a ¼-20 truss head machine screw from the underside of the magnet through the previously installed spacer.

D. Insert the truss head screw through the mounting hole in the end of the mounting bracket and secure with a ¼” internal tooth lock washer and ¼ - 20 acorn nut. Repeat to assemble the other three magnets.

E. Place the bracket on the 3/8 carriage bolts and install a 3/8 flat washer, lock washer and jam nut. Slide the bracket toward the end of the light bar until there is approx. 1/8 clearance between the edge of the bracket and the lip of the molded light bar end cap. Tighten securely. Repeat for the other bracket.

F. Cut a piece of plastic filler extrusion to fit between the two bracket assemblies and snap it into place.

G. Place the light bar assembly on the vehicle roof. It should be located approximately over the drivers head and centered on the vehicle. Insure that the ends of the light bar is equidistant from the roof gutters and the distance from the windshield to each end of the unit is the same.

K. Inspect the entire assembly to insure that all fasteners and brackets are tight.

WARNING!!

The holding power of magnetic mounting systems is dependent upon surface finish, surface flatness, and thickness of the steel mounting surface. Therefore, to maximize the holding power of the magnets:

- Mounting surface and magnets must be kept clean, dry and free of foreign particles that would prevent good surface contact.
- Ensure that the mounting surface is flat. Magnets should not be used on curved surfaces.
- Magnetic mounting systems should not be used on vehicles with vinyl tops.
- To prevent sliding of light assembly on mounting surface, quick acceleration and hard stops should be avoided.
- Magnetic mounting systems should only be used on MINI HELIOBE Light Bars.

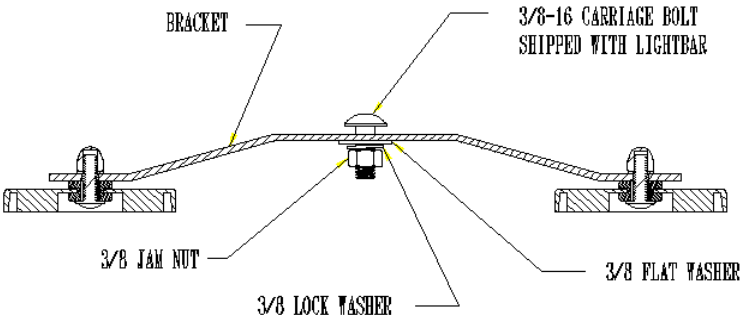

FIGURE 1

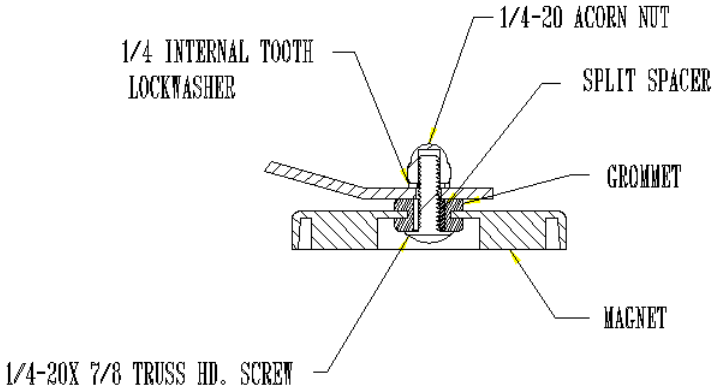

FIGURE 2